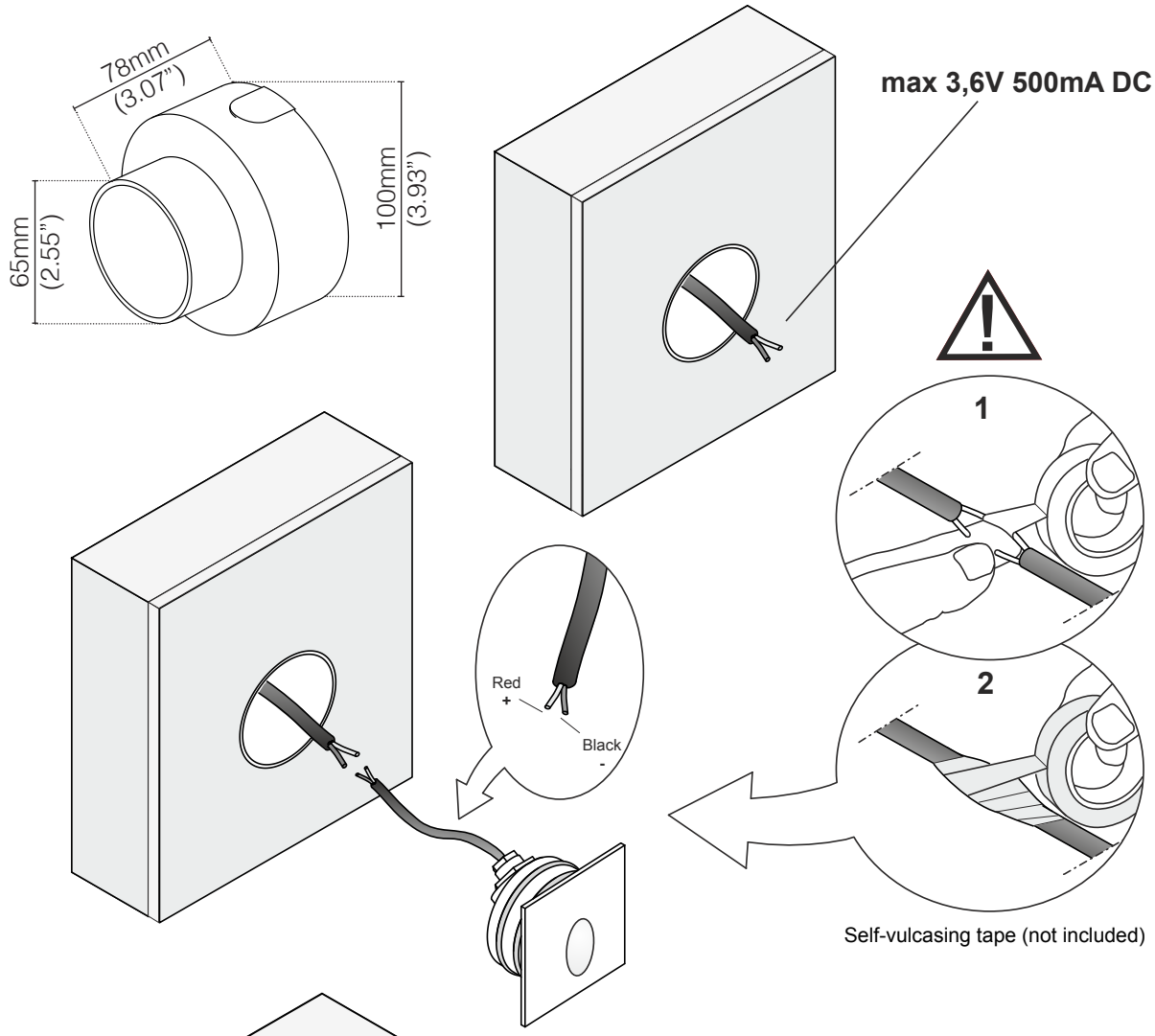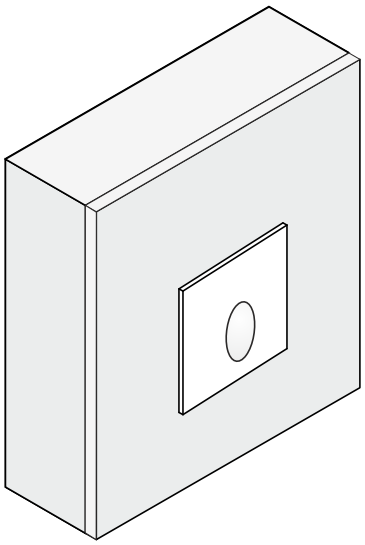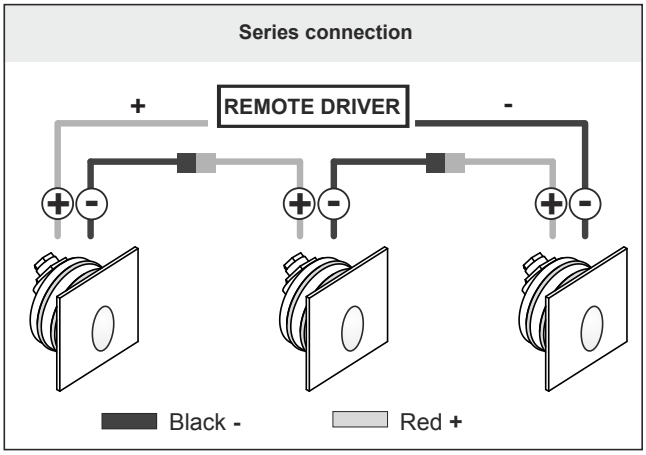Installation with plastic box art. L670232